KAGAMA

REAR HUB

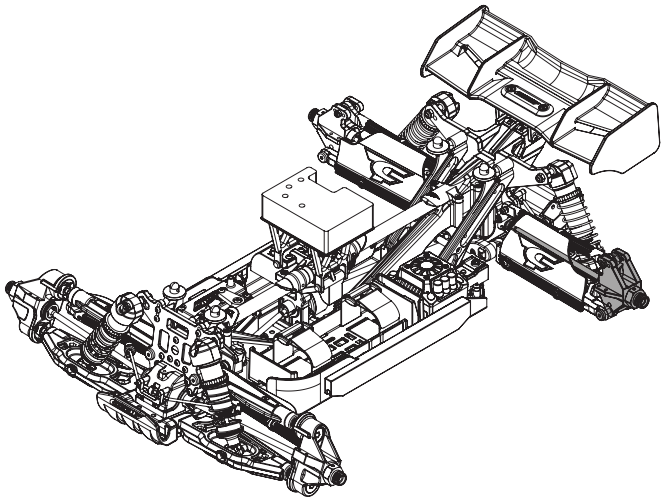

Required Tools:

- 2.0 Hex Driver
- 2.5 Hex Driver
- 5.0 Nutdriver
- 7.0 Nutdriver
- 17mm Wheel Nutdriver
- Thread-locker

STEP 1

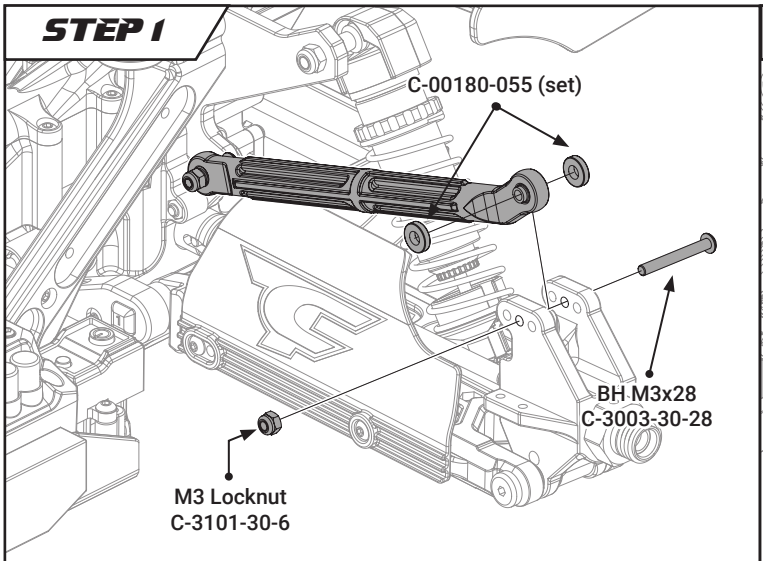

L=R

STEP 2

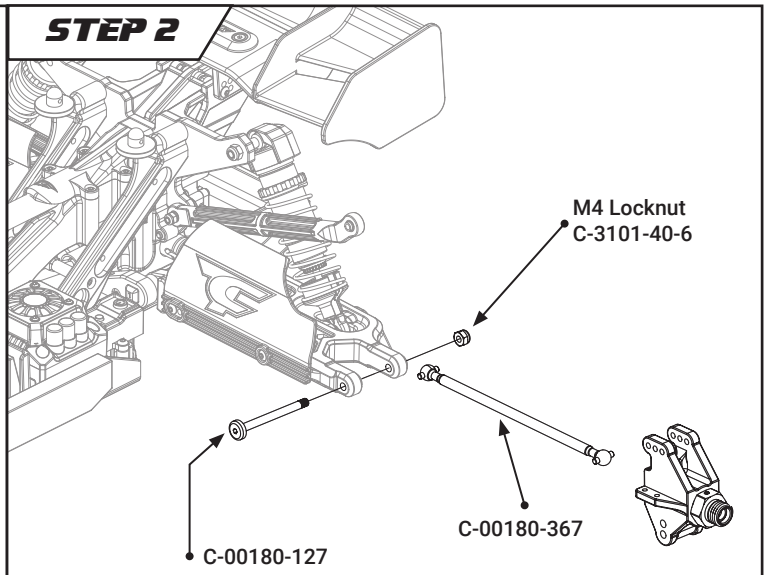

L=R

STEP 3

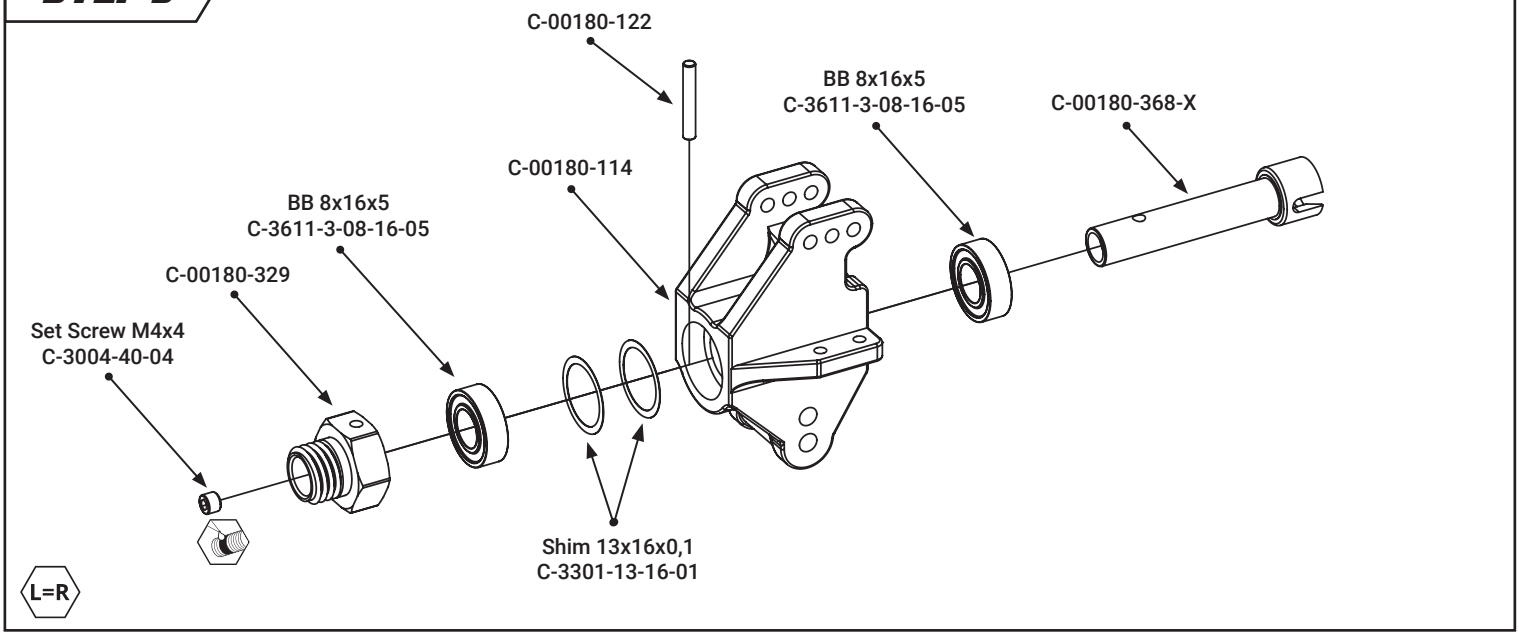

L=R